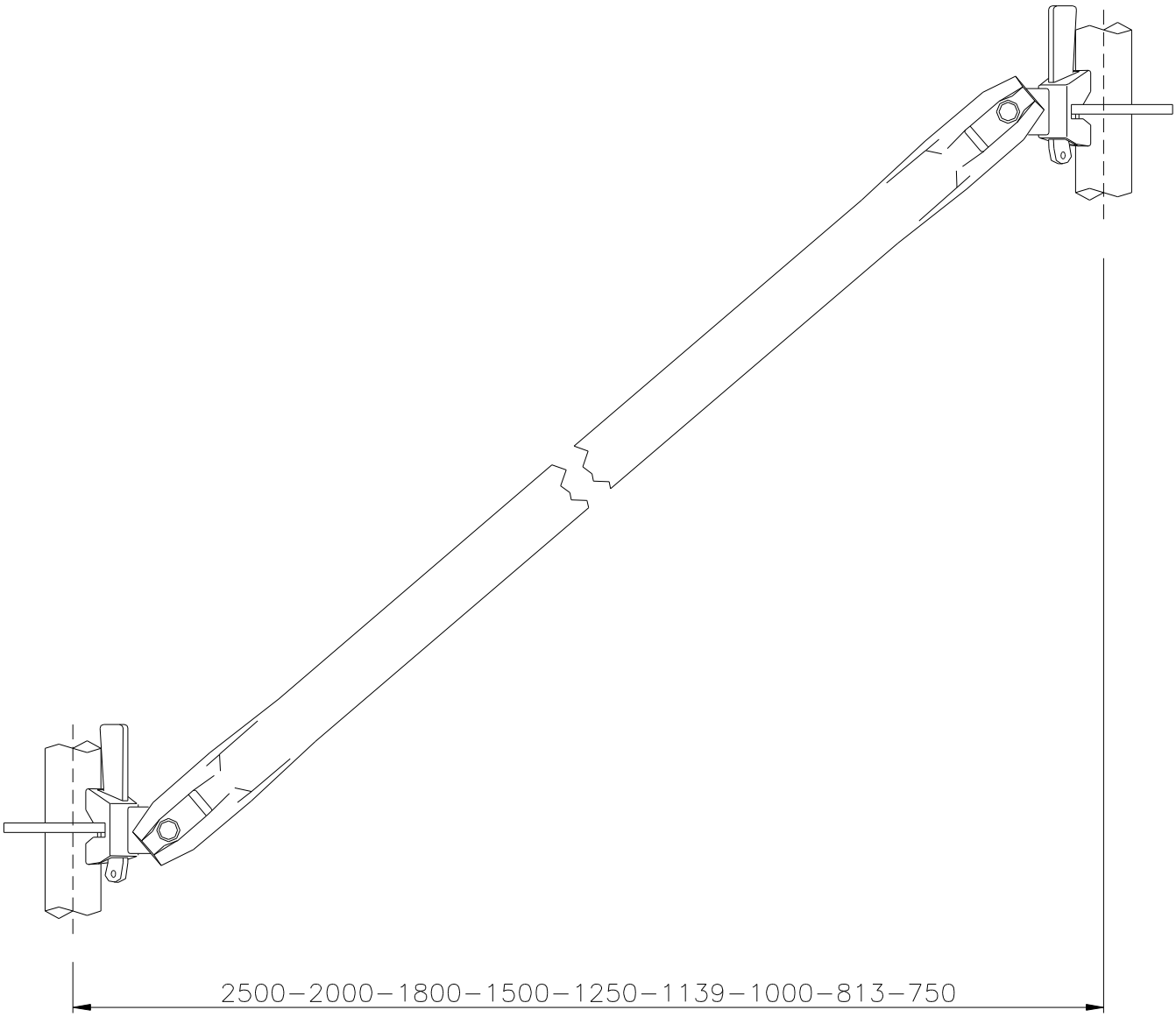
2500–2000–1800–1500–1250–1139–1000–813–750