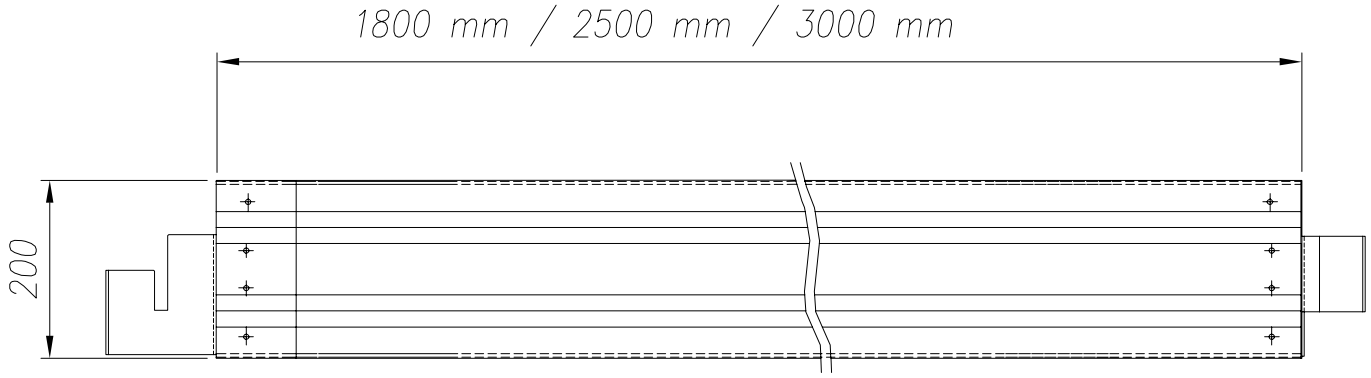
1800 mm / 2500 mm / 3000 mm
200

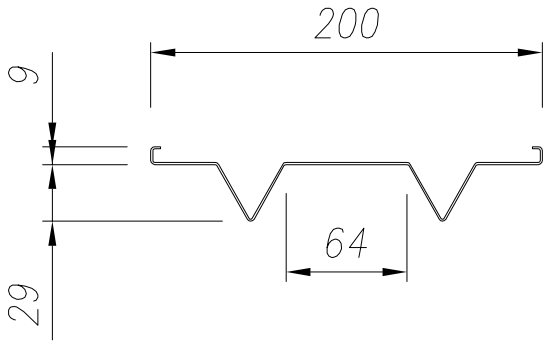
200
9
64
29